PERFORMANCE SPECIFICATIONS

Technology: Quartz-Crystal Microbalance

Range: 0.02 to 2500 parts-per-million by volume (ppmv). Readout capability in ppmw, lb/mmscf, mg/Nm^3, and dew point in ^{o}F or ^{o}C (requires process pressure as an input).

Limit of Detection: 0.02 ppmv

Accuracy: ±0.02 ppmv or ±10% of reading from 0.02 to 2500 ppmv

QCM Response Time: Near real time. Computer-enhanced response, which may lead to errors, is not required to obtain quick wet-up or dry-down response.

Allowable Inlet Pressure: 1.38 to 3.45 Bar (20 to 50 psi) [up to up to 200 Bar (3000 psi) with optional pressure reducer]; analyzer performance is independent of process pressure

Exhaust Pressure: 0 to 1 Bar (0 to 15 psi)

Gas Flow Requirements: Approximately 150 sccm. Approximately 1.0 slpm bypass flow for increased speed of response

Sample Gas Temperature: 0° to 100° C (32° to 212° F); analyzer performance is immune to changes in sample gas temperature

Outputs: Isolated 4 to 20 mA analog signal, keyboard selectable; 12 bit (0.025%) resolution, RS232 and RS485 serial communication ports

Alarms: Two contact closures; system and data valid alarms

Ambient Temperature Limits: -20° to 45° C (-4° to 113° F)

Utility Requirements
120/240 VAC, 50/60 Hz, 150 Watts
Instrument Air: 5 to 7 Bar (70 to 100 psi)

Reference Gas: Continuously produced using actual sample gas

On-Line Verification: Internal zero gas generator plus an internal moisture source with NIST-traceable calibration. These systems enable on-demand verification of analyzer accuracy and responsiveness without uninstalling the analyzer. Verification function can be triggered remotely with a voltage signal.

Reproducibility: ±5.0% of reading from 0.2 to 2500 ppmv

Moisture Generator: 1.0 ppmv nominal; calibration is NIST-traceable

Reliability: No routine factory calibration required due to highly stable and reliable nature of QCM sensor

Sensitivity: 0.01 ppmv or 1% of reading, whichever is greater

Weather Protection: System is suitable for outdoor installation. Enclosure is non-metallic and corrosion-resistant.

Dimensions: (W x H x D): 67.1 x 67.2 x 33.9 cm (26.4 x 26.5 x 13.34 in.)

Approvals and Certifications
UL/CSA General Safety Requirements
UL/CSA Class I, Division 2, Groups ABCD T4
Complies with all relevant European Directives
Russian Gosstandart Pattern Approval

ADDITIONAL SAMPLE SYSTEM COMPONENTS

In order to derive the full advantages of the Model 3050-DO, a well-designed sample transport system is necessary. AMETEK can supply a complete sampling system to include:

- ***Filters:*** *In-line or bypass filters to remove particulate from gas or liquid sample streams and small amounts of oil or other condensables from gas streams.*
- ***Pressure Reducer:*** *Required if sample sources are at pressures higher than 3.45 Bar (50 psi). Maximum input pressure is 200 Bar (3000 psi).*
- ***Heated Pressure Reducer:*** *Designed to prevent condensation of gases upon pressure reduction, or to vaporize liquefied gas streams with boiling points not exceeding 40° C (104° F). Maximum input pressure is 200 Bar (3000 psi). Suitable for NEC/CEC Class I, Division 1, Groups B/C/D, and CENELEC IIC T3 areas.*

One of a family of innovative process analyzer solutions from AMETEK Process Instruments. Specifications subject to change without notice.

USA - Pennsylvania
150 Freeport Road
Pittsburgh, PA 15238
Ph. 412-828-9040
Fax 412-826-0399

CANADA
2876 Sunridge Way N.E
Calgary, AB T1Y 7H9
Ph. 403-235-8400
Fax 403-248-3550

MANUFACTURING LOCATIONS
ISO 9001

USA - Delaware
455 Corporate Blvd.
Newark, DE 19702
Ph. 302-456-4400
Fax 302-456-4444

USA - Oklahoma
2001 N. Indianwood Ave.
Broken Arrow, OK 74012
Ph. 918-250-7200
Fax 918-459-0165

AMETEK®
PROCESS INSTRUMENTS
www.amtekpi.com
© 2004, by AMETEK, Inc. All rights reserved.
3050-DO (12/09/04)

SUPPORT LOCATIONS

USA - Texas
Ph. 281-463-2820
Fax 281-463-2701

CHINA - Beijing
Ph. 86-10-85262111
Fax 86-10-85262141

CHINA - Shanghai
Ph. 86 21 6426 7049
Fax 86 21 6426 7054

FRANCE
Ph. 33 1 30 68 69 20
Fax 33 1 30 68 69 29

GERMANY
Ph. 49 21 59 91 36 0
Fax 49 21 59 91 3680

MIDDLE EAST - Dubai
Ph. 971-4-881 2052
Fax 971-4-881 2053

SINGAPORE
Ph.65-6484-2388
Fax 65-6481-6588

MOISTURE PROCESS INSTRUMENTS

BULLETIN 3050-DO

ANALYZER SOLUTIONS FOR *YOUR* PROCESS!

Model 3050-DO for Dryer Outlet Monitoring

Reduce operational costs and increase plant uptime through feedback control.

Tremendous cost savings can be realized through optimization of mole sieve dryer operation. Use of a truly accurate and reliable moisture analyzer enables feedback control of dryer regeneration. Feedback control minimizes the frequency of bed regeneration resulting in lower operational costs and extended plant uptime. AMETEK Process Instruments has designed the Model 3050-DO to specifically monitor the very low moisture levels typically exiting mole sieve dryer systems.

The Model 3050-DO provides extremely accurate measurement of trace levels of moisture in a gas through the use of a quartz-crystal oscillator sample cell. AMETEK is the leader in quartz-crystal technology, which for thirty years has offered significant advantages over other measurement techniques:

- ***It is the most accurate trace moisture measurement technology available.***
- ***It responds far faster to both increasing and decreasing moisture levels.***
- ***It is specific to moisture in most applications.***
- ***It provides a much more rugged sensor.***

Model 3050-DO for Dryer Outlet Monitoring

Actual ppmv Moisture	Model 3050-DO Accuracy	Aluminum-Oxide Accuracy ±2° C for dew points ≥ -65° C and ±3° C for below
0.1	±0.02 ppmv	+72.0%/-57.0% of reading
1	±10% of reading	+59.6%/-38.2% of reading
5	±10% of reading	+52.4%/-35.2% of reading
10	±10% of reading	+30.9%/-24.0% of reading
20	±10% of reading	+29.3%/-23.0% of reading

** Dew point conversions are referenced to 14.7 psia*

Today, because of these advantages, quartz-crystal-based moisture analyzers are the fastest growing line of moisture analyzers in the world.

QUARTZ-CRYSTAL MICROBALANCE – THE SAFEST CHOICE

Dramatically Better Accuracy

Consider the basic accuracy specification of the 3050-DO: ±0.02 ppmv or ±10% of reading, whichever is greater, over the operating range of 0.02 to 2500 ppmv. In the table on the left, we've compared this to the accuracy of a humidity analyzer that is typically listed as dew point. The typical specification is ±3° C dew point for gases drier than -65° C dew point. The data for the aluminum-oxide analyzer is based upon the specifications of a newly calibrated probe. The aluminum oxide's calibration drift, temperature

AMETEK®

instability and other sources of error are not typically taken into account by the probe manufacturer's accuracy specification. The aluminum oxide's slow speed of response is another issue.

Direct Measurement of Concentration

The Model 3050-DO measures moisture concentration directly in parts-per-million by volume, parts-per-million by weight, or mass-of-water per standard volume without additional pressure or temperature compensation. This provides you with a direct, meaningful reference to benchmark your dryer's performance. For customers who wish to convert concentration to dew point, the 3050-DO can be programmed with the process pressure.

Long Term Stability Reduces Maintenance Costs

The 3050-DO analyzer is inherently more stable due to its quartz-crystal microbalance technology. The stability of the vibrating quartz crystal means that you never need to send the analyzer out for re-calibration. This means that you will forever eliminate those costly, routine maintenance projects that are associated with aluminum-oxide humidity sensors. But don't take our word about the analyzer's stability; ask the analyzer itself! Every 3050-DO comes equipped with an internal verification system that consists of both zero and span challenges that are created from the actual sample gas.

Built-in Verification Capability

With the built-in zero module and the internal moisture generator, the 3050-DO gives you data you can have confidence in. On a programmed schedule or whenever you feel it's necessary, you can route your process gas through the 3050-DO's internal zero gas generator and its internal moisture generator, giving you a zero reference and a span calibration standard based upon the actual process gas. The 3050-DO automatically zeroes itself and compares its moisture measurement with the NIST-traceable known value of the internal moisture generator. If necessary, the analyzer can make small corrections to its calibration automatically. If a severe calibration problem exists, the analyzer will provide an alarm. With the 3050-DO, you will always be confident that the analyzer is responsive to the moisture present in the sample gas.

Gain Peace of Mind Through Active Feedback

The Model 3050-DO is an active device. It is constantly monitoring itself for its frequency of oscillation, sample flow, sample pressure, operating temperature, ambient temperature, and other telling parameters. In addition, the QCM sensor is continually challenged with increasing and decreasing moisture levels due to the non-equilibrium nature of its operation. Through this continuous system of active feedback, the 3050-DO keeps you confident in its performance. Remember, if at any time you doubt the analyzer's readings, you can use the built-in verification function.

The 3050-DO is simply the best analyzer available for controlling and optimizing your gas drying process. Make the decision to protect your process, your revenue, and your peace of mind today.

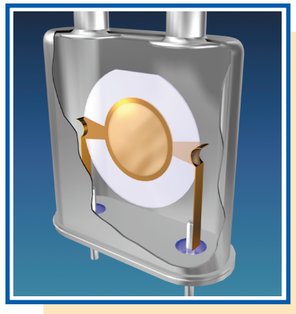

THE QUARTZ-CRYSTAL SENSOR

The heart of the 3050-DO analyzer is a quartz-crystal microbalance (QCM) sensor and sampling system developed by AMETEK specifically for highly accurate moisture measurements. The sensor consists of a pair of electrodes that support the QCM sensor. When voltage is applied to the sensor, a very stable oscillation occurs.

The faces of the oscillator are covered with a hygroscopic polymer. As the amount of moisture sorbed on to the polymer varies, the mass of the QCM changes producing a corresponding change in the frequency of oscillation. This change is directly related to the surrounding gas.

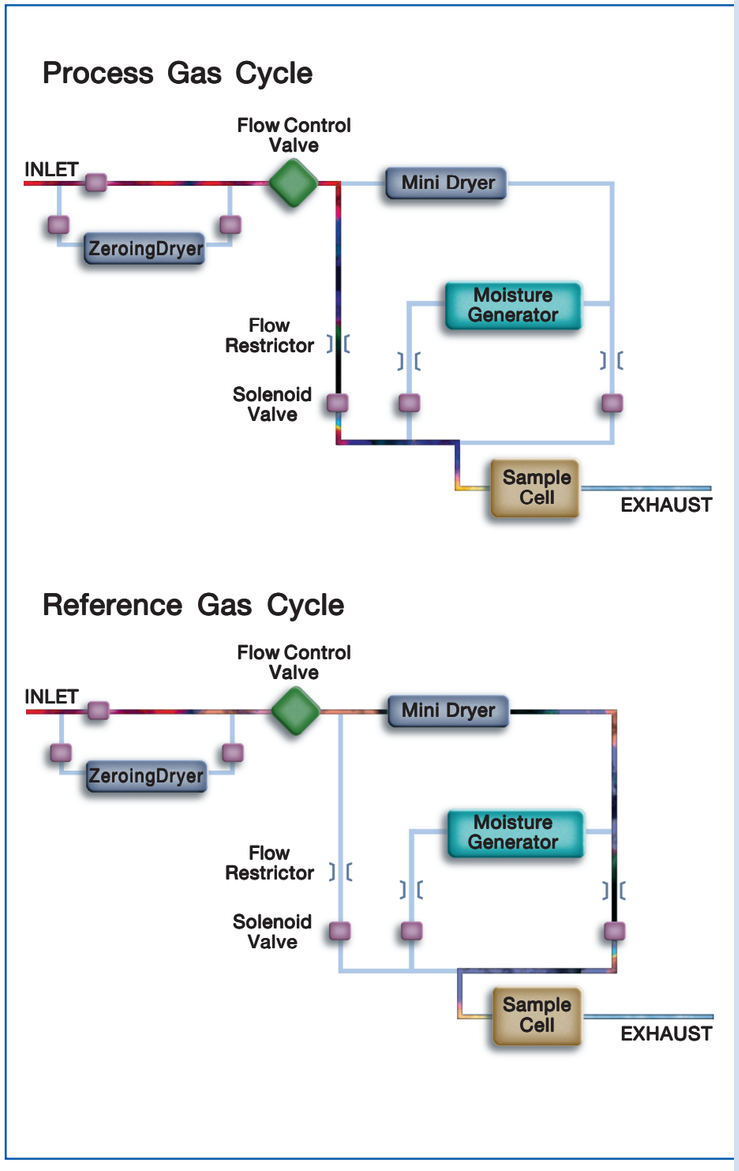

Non-equilibrium Operating Theory of Quartz-crystal Microbalance

Moisture sensors are notoriously slow because they need a long time to equilibrate, especially when drying down. Non-equilibrium operation is a special technique developed as a means of improving a moisture sensor's speed of response. It works by systematically cycling the sensor between the process gas and a dry reference gas.

During the process gas cycle (top, left), moisture molecules accumulate on the surface of the QCM sensor. During the reference gas cycle (bottom, left), these water molecules are swept off the surface of the sensor by the dry gas flow. Since there is no waiting for equilibrium, the system provides a measurement of moisture concentration every cycle.

The number of water molecules that accumulate on the surface of the sensor is a function of the difference in moisture between the process gas and reference gas. The analyzer compares the process gas with the known, dry reference as opposed to trying to measure an absolute value that only occurs once the equilibrium has been achieved. When a high moisture event occurs, the 3050-DO responds quickly to alert you to the problem. After the high moisture event passes, the non-equilibrium nature of the 3050-DO means that no long dry down period is ever needed before you will get accurate sub-ppmv measurements.